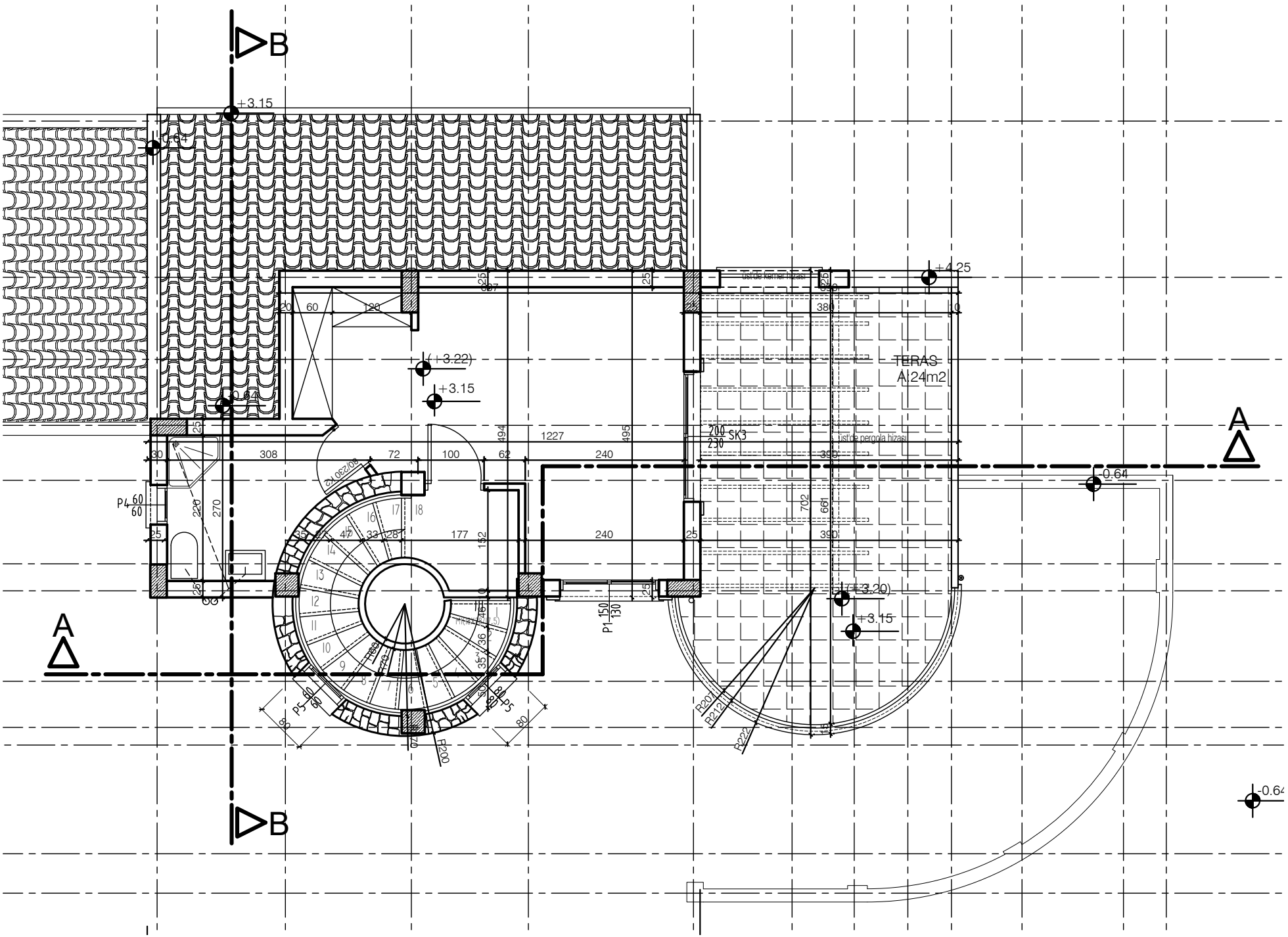

B
+3.15
-0.64
+4.25
(+3.22)
+3.15
TERAS
A:24m2
SK3
-0.64
A
(+3.20)
+3.15
A
B
-0.64